PLANT LIST				
QUANT.	SYMBOL	PLANT TYPE	SIZE	NOTES
36	C H	CARISSA HOLLY Ilex carissa	3 GAL.	2' O.C. , FULL, HEALTHY, MATCHING 12" - 14" HT. X 10"- 12" SPR.
5	C P	CHINESE PISTACHE Pistacia chinensis	25 GAL. 1.5" CAL. MIN.	SINGLE-TRUNK , DOUBLE-STAKED 9' - 11' HT. X 4' - 5' SPR. , MATCHING
5	I C	ITALIAN CYPRESS Cupressus sempervirens	25 GAL.	SINGLE-TRUNK , SINGLE-STAKED 9' - 11' HT. X 1' - 1'-6" SPR. , MATCHING
11	L O	LIVE OAK Quercus virginiana	65 GAL. 3" CAL. MIN.	SINGLE-TRUNK , DOUBLE-STAKED 11' - 14' HT. X 5' - 6' SPR. , MATCHING
723	L R	LIRIOPE , BIG BLUE Liriope spicata 'Big Blue'	1 GAL.	13" O.C. , FULL, HEALTHY, MATCHING 6" - 8" HT. X 6" - 8" SPR.
41	N W	PINK SHRUB ROSE , NEARLY WILD Rosa compacta 'Nearly Wild'	3 GAL.	2' - 3" O.C. , FULL, HEALTHY, MATCHING 12" - 16" HT. X 14" - 18" SPR.
57	W L	WAXLEAF LIGUSTRUM Ligustrum japonicum	3 GAL.	2' - 9" O.C. , FULL, HEALTHY, MATCHING 28" - 34" HT. X 20" - 26" SPR.
	HYDRO	COMMON BERMUDAGRASS Cynodon dactylon	SQ. FT.	WITH GREEN CELLULOSE FIBER AND FERTILIZER , APPLY WHERE INDICATED
	SOD	419 TIFWAY BERMUDAGRASS Cynodon dactylon 'tifway 419'	SQ. YD.	SOLID SOD , ROLLED INSTALL WHERE INDICATED

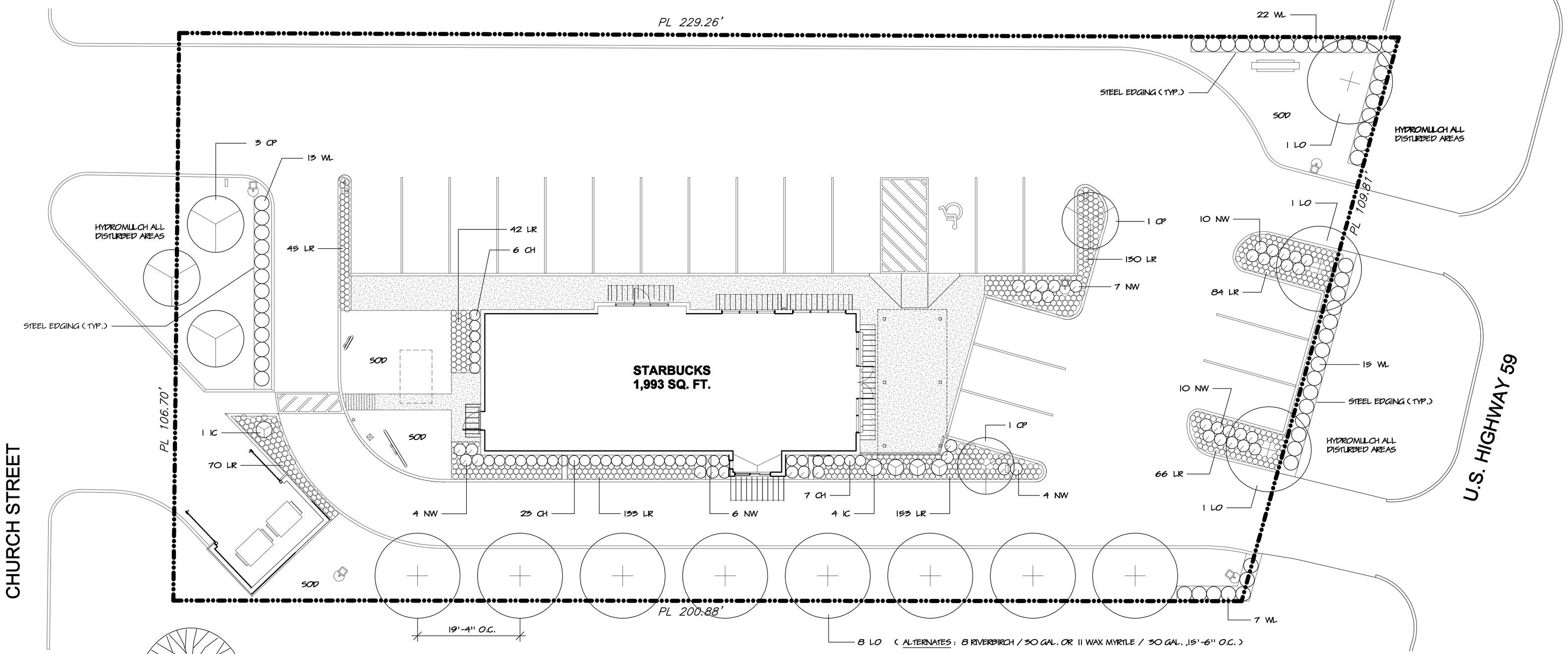

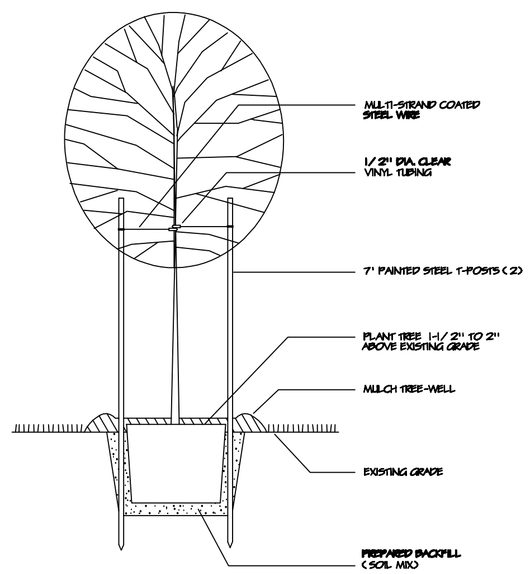

A CONTAINER TREE PLANTING DETAIL
(NO SCALE)

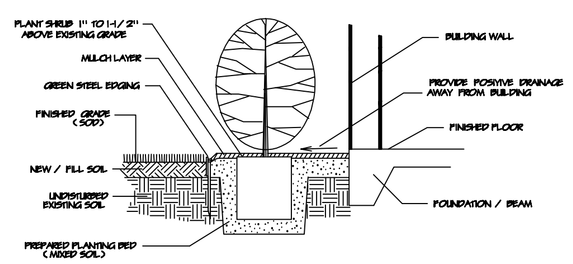

B SHRUB PLANTING DETAIL
(NO SCALE)

LANDSCAPE CONSTRUCTION SPECIFICATIONS :

1.) Prepare all new planting beds by removing all rocks, concrete and construction debris and till in 3'' of new acidic Mixed Soil and pre-emergent herbicide such as Pennant or Eptam at the recommended rates, then rake all bed areas smooth prior to planting. Install 1/ 8''x 4'' green steel landscape edging typically where new planting beds meet turf. When end of edging butts up against paving, trim exposed corner at 45 degree angle for pedestrian safety.
2.) Grade all planting beds to edges of beds and away from buildings prior to planting for positive drainage away from foundation(s) .
3.) Fertilize all new trees, shrubs and groundcovers with Osmocote (or equal) time-release fertilizer.
4.) Mulch all new planting beds and trees with a 2'' (avg.) layer of shredded hardwood topdress mulch as from Letco or CJM Soil Supermarket.
5.) Double-Stake all specified trees (see plant list) with 2 (7' tall) painted metal T-Posts, multi-strand coated steel wire and clear vinyl tubing.
6.) Root-Stimulate all new trees with Superthrive brand root-stimulator (or equal) as per manufacturers recommendations .
7.) Plant sizes shown are the minimum acceptable. Plants will be inspected and measured for conformance. Plants specified with container size only shall be of or better than locally accepted nursery standards. Obviously undersized, misshapen, weak or inadequately rooted plants will be rejected. The Owner's decision will be final in matters concerning plant size, condition and health. Plants larger in size than specified may be used if approved by the Landscape Architect or the Owner, but the use of larger plants will not automatically increase the contract amount.
8.) Thoroughly handwater all new plantings immediately after planting.
9.) Fine grade all new turf areas (by hand if necessary) prior to installation of grass. This is for a nice smooth turf-bed as well as for normal drainage purposes.
10.) Solid sod to be 99 percent pure Tiffway 419 Bermudagrass. Sod to be rolled immediately after watering and installation. Hydromulch all other construction disturbed areas with Common Bermudagrass. (2 lbs. hulled seed per 1000 s.f.) Include green cellulose fiber and fertilizer in slurry.
11.) Landscape contractor is responsible for keeping jobsite neat, clean and safe at all times in reference to their landscape work. Excess excavated soil, accumulations of landscape related trash, plant containers etc. to be removed from jobsite by Landscape Contractor daily and at the end of the project.
12.) The Owner, Landscape Architect and general Contractor reserve the right to inspect the progress of the project and any or all of the materials and procedures used at any time. Such materials and procedures will be subject to approval or rejection at that time and promptly followed up in writing to all concerned parties.

Prepared by :
Integrated Landscape Architecture
769 Rolling Oaks Drive
Driftwood, Texas 78619
PH 713-973-7891
E-Mail inlandsup@twinet.com

N

LANDSCAPE PLAN | SCALE : 1" = 10' | 1

TEAKWOOD LANDSCAPING
11215 JONES RD. WEST
HOUSTON, TEXAS 77065
PHONE : 281-720-0022
FAX : 281-517-0077

ISSUES AND REVISIONS

NO.	DATE	DESCRIPTION

STARBUCKS COFFEE SHELL
(U.S. 59 & F.M. 1314)
23690 HWY. 59
PORTER, TEXAS 77365-4633

Landscape Plan

Drawn: 3/28/13
Rev:

L101